TECHNOPRO

FIRE FIGHTING VALVES

APPROVED

CAST STEEL VALVES
(GATE, GLOBE, CHECK & POST INDICATOR)

RESILIENT WEDGE GATE VALVE

- Fire Protection Valve .UL Listed .FM Approved. Inside Screw and Non-Rising Stem.
- Flanged ends to ANSI B16.1 Class 125.
- Working pressure:
  2½"~12":200 psi non-shock cold water.

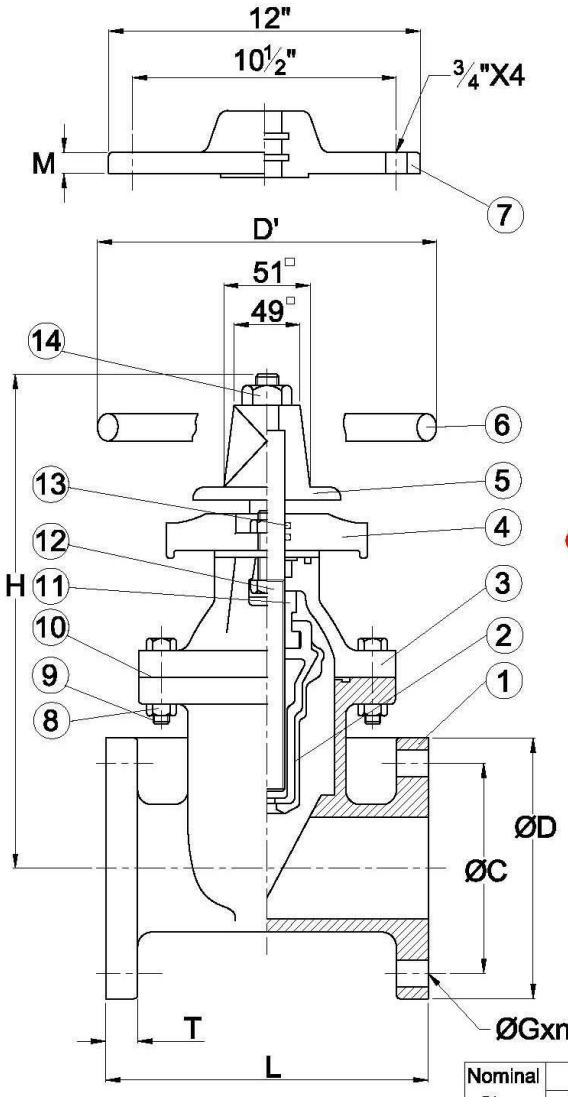

FIG NO:721UF

NO.	PART NO.	PART	MATERIAL	ASTM SPEC.
1	01	Body	Cast Iron	ASTM A126-B
2	03	Disc Rubber	Cast Iron Coated with EPDM	
3	02	Bonnet	Cast Iron	ASTM A126-B
4	04	Box	Cast Iron	ASTM A126-B
5	05N	Operation Nut	Cast Iron	ASTM A126-B
6	05	Hand Wheel	Cast Iron	ASTM A126-B
7	04A	Base Plate	Cast Iron	ASTM A126-B
8	27	Nut	Steel	ASTM A307-A
9	28H	Hex.Head Bolt	Steel	ASTM A307-A
10	14R	Rubber Gasket	EPDM	
11	13	Disc Nut	Cast Bronze	ASTM B62
12	12	Stem	Stainless Steel	AISI 420
13	10	O Ring	EPDM	
14	27	Nut	Steel	ASTM A307-A

- Stem Also Available in Brass or Stainless Steel(304)

2½"~12":200WP

Nominal Size	Dimensions in Inches								
	H	L	ØC	ØD	D'	T	M	ØGxn	Net.Wt.Lbs.
2½"	9 15/16	7½	5½	7	7	11/16		¾x4	42
3"	13 7/8	8	6	7½	10	¾	21/32	¾x4	77
4"	14 11/32	9	7½	9	10	15/16	21/32	¾x8	104
6"	18¼	10½	9½	11	14	1	¾	⅞x8	182
8"	21 11/16	11½	11 13/16	13½	14	1⅛	¾	⅞x8	246
10"	25⅝	13	14 5/16	16	16	1 3/16	13/16	1x12	436
12"	29⅛	14	17	19	18	1¼	⅞	1x12	

- Note:Design and materials are subject to change without notice.

Resilient Wedge Gate Valves

- Fire Protection Valve. UL Listed. FM Approved. Outside Screw and Yoke Rising Stem.
- Epoxy coated inside and out to AWWA C550.
- Flanged ends to ANSI B16.1 Class 125.
- Working pressure:

  2½"~12": 200 PSI non-shock cold water

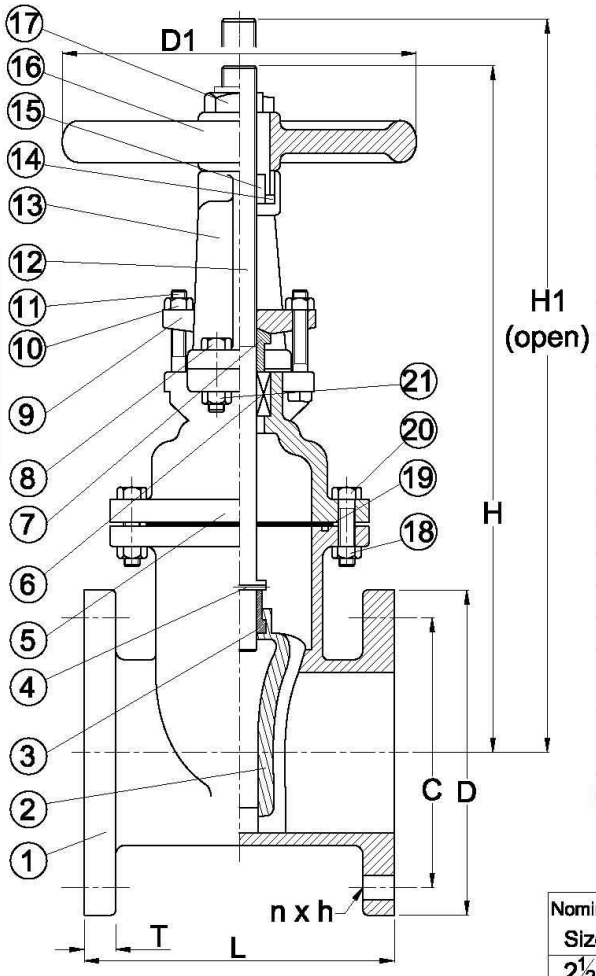

Fig. 722U

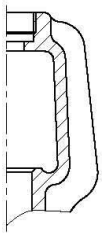

Size 2-1/2" to 4"
One piece Yoke/bonnet Construction

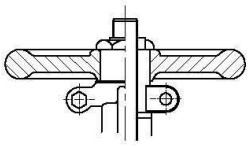

Size 6" to 12"
Yoke Construction

MATERIAL LIST

Item	No.	Part	Material	ASTM SPEC.
1	01	Body	Cast Iron	A126-B
2	03	Disc Rubber	Cast Iron Coated with EPDM	
3	13	Disc Nut	Cast Bronze	B62
4	22T	Taper Pin	Stainless Steel	AISI 304
5	02	Bonnet	Cast Iron	A126-B
6	15	Packing	Non-Asbestos Packing	
7	07	Gland	Cast Bronze	B62
8	28H	Hex. Head Bolt	Steel	A307-A
9	06	Gland Flange	Ductile Iron	A536 Grade 65-45-12
10	27	Hexagon Nut	Brass	B16
11	28S	Square Head Bolt	Steel	A307-A
12	12	Stem	Stainless Steel	AISI 420
13	04	Yoke	Cast Iron	A126-B
14	11C	Sleeve Nut	Ductile Iron	A536 Grade 65-45-12
15	09	Yoke Sleeve	Cast Bronze	B62
16	05	Hand Wheel	Cast Iron	A126-B
17	18	Wheel Nut	Ductile Iron	A536 Grade 65-45-12
18	27	Hexagon Nut	Steel	A307-A
19	14R	Rubber Gasket	EPDM	
20	28H	Hex.Head Bolt	Steel	A307-A
21	27	Hexagon Nut	Steel	A307-A

- Stem Also Available in Brass or Stainless Steel(304).

Nominal Size	Dimensions unit:inch								Net.Wt. Lbs.
	L	C	D	D1	T	nxh	H	H1	
2½"	7½	5½	7	7	11/16	4x¾	12¾	14⅞	44
3"	8	6	7½	10	¾	4x¾	19	22	85
4"	9	7½	9	10	15/16	8x¾	19½	23½	96
6"	10½	9½	11	12	1	8x⅞	26⅛	32⅛	178
8"	11½	11¾	13½	14	1⅛	8x⅞	32⅛	40⅛	279
10"	13	14¼	16	16	1 3/16	12x1	40⅛	50⅛	435
12"	14	17	19	18	1¼	12x1	46⅞	59¼	607

- Note:Design and materials are subject to change without notice.

250 Lb.WWP Iron Body Resilient Wedge Gate

- Fire Protection Valve. UL Listed .FM Approved.
- Non-Rising Stem. Indicator Post Pattern.
- Epoxy Coated Interior/Exterior.
- Basic Valve Meets AWWA C-509 Standard.
- End Flanges Conform to ANSI B16.1 Class 250.

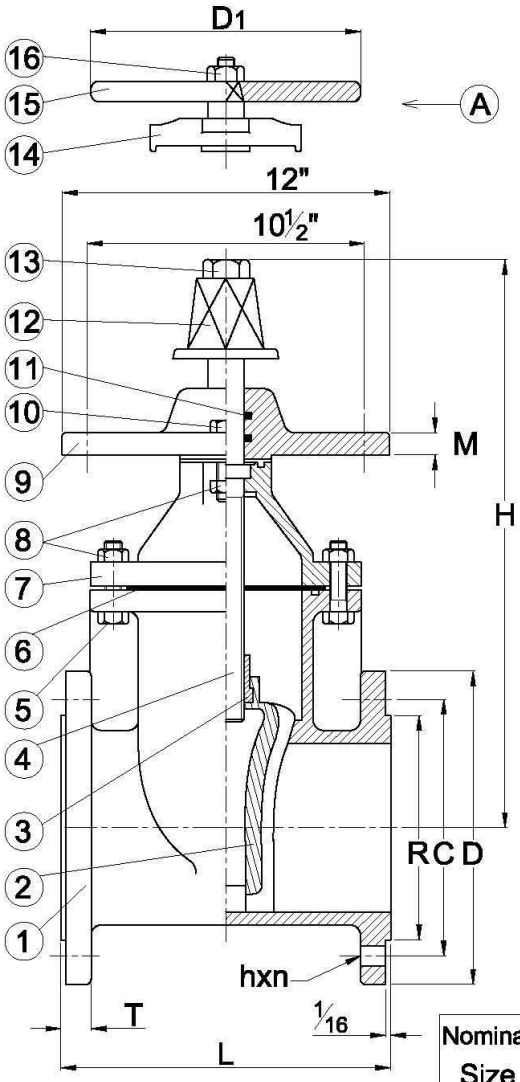

Fig: 721H(250#)

Ⓐ : Valve with handwheel is also available.

MATERIAL LIST

Item	No.	Part	Material	ASTM SPEC.
1	01	Body	Cast Iron	A126-B
2	03	Disc (Rubber)	Cast Iron Coated with EPDM	
3	13	Disc Nut	Cast Bronze	B62
4	12	Stem	Brass	B16
5	28H	Hex. Head Bolt	Steel	A307-A
6	14	Rubber Gasket	EPDM	
7	02	Bonnet	Cast Iron	A126-B
8	27	Hexagon Nut	Steel	A307-A
9	04A	Base Plate	Cast Iron	A126-B
10	28H	Hex. Head Bolt	Steel	A307-A
11	10	O Ring	EPDM	
12	05N	Operation Nut	Cast Iron	A126-B
13	27	Hexagon Nut	Steel	A307-A
14	04	Box	Cast Iron	A126-B
15	05	Hand Wheel	Cast Iron	A126-B
16	27	Hexagon Nut	Cast Iron	A307-A

1. Size 2½" with Cast Bronze.
2. Stem also available in Stainless Steel(SUS304/420).

- Design and materials are subject to change without notice.

Dimensions unit:inch

Nominal Size	Dimensions									Net.Wt. Lbs.
	H	L	C	D	D1	R	T	M	hxn	
2½"	10	8½	5 7/8	7½	7	4 15/16	1	21/32	7/8x8	
3"	13 7/8	9½	6 5/8	8¼	10	5 11/16	1 1/8	21/32	7/8x8	
4"	14 11/32	11	7 7/8	10	10	6 15/16	1¼	21/32	7/8x8	
6"	18 9/32	12	10 5/8	12½	12	9 11/16	1 7/16	3/4	7/8x12	
8"	21 11/16	13	13	15	14	11 15/16	1 5/8	3/4	1x12	
10"	25 5/8	14 3/4	15¼	17½	16	14 1/16	1 7/8	13/16	1 1/8x16	
12"	29 3/32	16 5/8	17 3/4	20½	18	16 7/16	2	7/8	1¼x16	

250 Lb.WWP Iron Body Resilient Wedge Gate

- Fire Protection Valve. UL Listed .FM Approved.
- Outside Screw and Yoke Rising Stem.
- Epoxy Coated Interior/Exterior.
- Basic Valve Meets AWWA C-509 Standard.
- End Flanges Conform to ANSI B16.1 Class 250.

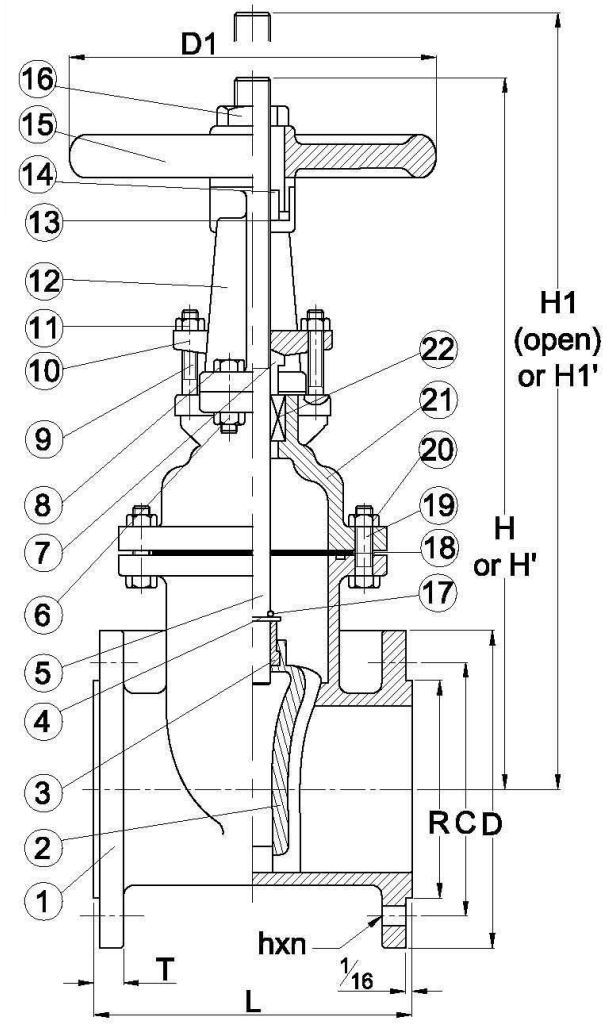

Fig: 722H(250#)

MATERIAL LIST

	Item No.	Part	Material	ASTM SPEC.
	1 01	Body	Cast Iron	A126-B
1	2 03	Disc (Rubber)	Cast Iron Coated with EPDM	
	3 13	Disc Nut	Cast Bronze	B62
	4 22T	Taper Pin	Stainless Steel	SUS304
2	5 12	Stem	Brass	B16
	6 27	Hexagon Nut	Steel	A307-A
	7 07	Gland	Cast Bronze	B62
	8 28H	Hex. Head Bolt	Steel	A307-A
	9 28S	Square Head Bolt	Steel	A307-A
	10 06	Gland Flange	Ductile Iron	A536 Grade 65-45-12
	11 27	Hexagon Nut	Brass	B16
3	12 04	Yoke	Cast Iron	A126-B
4	13 11C	Sleeve Nut	Ductile Iron	A536 Grade 65-45-12
	14 09	Yoke Sleeve	Cast Bronze	B62
	15 05	Hand Wheel	Cast Iron	A126-B
	16 18	Wheel Nut	Ductile Iron	A536 Grade 65-45-12
	17 10	O Ring	EPDM	
	18 14	Rubber Gasket	EPDM	
	19 28H	Hex. Head Bolt	Steel	A307-A
	20 27	Hexagon Nut	Steel	A307-A
3	21 02	Bonnet	Cast Iron	A126-B
	22 15	Packing	Non-Asbestos Packing	

1. Size 2½" with Cast Bronze.
2. Stem also available in Stainless Steel(SUS304/420).
3. Size 2½"~4" made with bonnet,Size 6"~12"made with separate yoke bolted to bonnet.
4. Only Size 2½"~6".
5. H' and H1' denote longer stem to allow for tamper switch notch.

- Design and materials are subject to change without notice.

Nominal Size	Dimensions unit:inch											Net.Wt Lbs.
	H	H1	L	C	D	D1	T	R	H'	H1'	hxn	
2½"	12	14 1/8	8 1/2	5 7/8	7 1/2	7	1	4 15/16	12 3/4	14 7/8	7/8x8	
3"	17 3/4	20 7/8	9 1/2	6 5/8	8 1/4	10	1 1/8	5 11/16	19	22	7/8x8	
4"	18 1/4	22 1/4	11	7 7/8	10	10	1 1/4	6 15/16	19 1/2	23 1/2	7/8x8	
6"	24 1/2	30 1/2	12	10 5/8	12 1/2	12	1 7/16	9 11/16	26 1/8	32 1/8	7/8x12	
8"	30 1/8	38 1/4	13	13	15	14	1 5/8	11 15/16	32 1/8	40 1/8	1x12	
10"	36 1/8	46 1/4	14 3/4	15 1/4	17 1/2	16	1 7/8	14 1/16	40 1/8	50 1/8	1 1/8x16	
12"	42 1/2	54 7/8	16 5/8	17 3/4	20 1/2	18	2	16 7/16	46 7/8	59 1/4	1 1/4x16	

200 Lb.WWP Iron Body Check

- Fire Protection Valve.UL Listed.FM Approved.
- Bolted Bonnet.Horizontal Swing.Renewable Seat and Disc.
- Working Pressure:

  125 PSI Steam to 450° F or 232° C

  200 PSI Non-Shock Cold Water,Oil or Gas to -20° F to 150° F or -29° C to 66° C

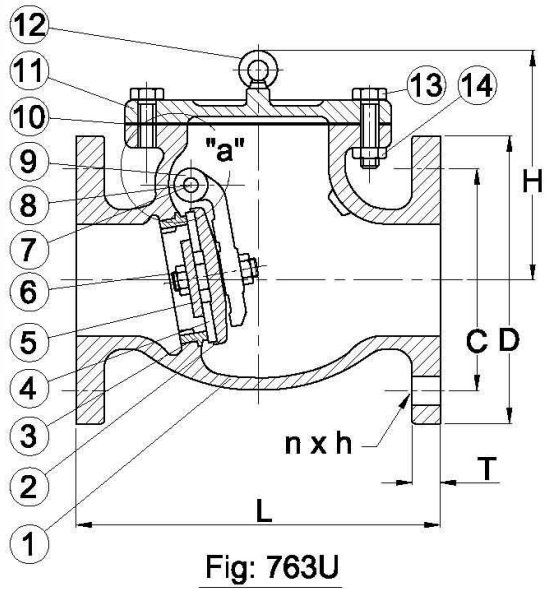

Fig: 763U

MATERIAL LIST

Item	No.	Part	Material	ASTM SPEC.
1	01	Body	Cast Iron	A126-B
2	03	Disc(Rubber)	Ductile Iron	A536(65-45-12)
		Disc(Bronze)	Ductile Iron	A536(65-45-12)
3	08B	Body Seat Ring	Cast Bronze	B62(C83600)
4	08D	Disc Ring(Rubber)	EPDM	
		Disc Ring(Bronze)	Cast Bronze	B62(C83600)
5	21R	Disc Washer	Ductile Iron	A536(65-45-12)
6	27	Disc Nut	Steel	A307-A
7	22H	Hanger Pin	Stainless Steel	A276-410
8	28P	Hanger Plug	Brass	B16
9	05	Hanger	Ductile Iron	A536(65-45-12)
10	14	Gasket	Non-Asbestos	
11	02	Cover	Cast Iron	A126-B
12	28E	Eye Bolt	Steel	A307-A
13	28H	Hex.Head Bolt	Steel	A307-A
14	27	Hexagon Nut	Steel	A307-A

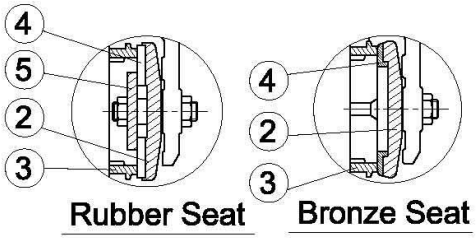

Rubber Seat Bronze Seat

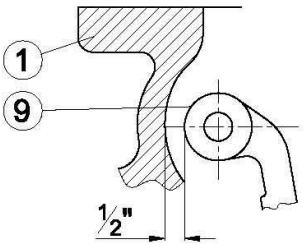

"a"VIEW

DIMENSIONS

Unit: inch

Nominal Size	Dimensions						Net.Wt. Lbs.
	H	L	C	D	T	nxh	
3"	$7\frac{5}{8}$	$9\frac{1}{2}$	6	$7\frac{1}{2}$	$\frac{3}{4}$	$4x\frac{3}{4}$	46.1
4"	$8\frac{7}{16}$	$11\frac{1}{2}$	$7\frac{1}{2}$	9	$\frac{15}{16}$	$8x\frac{3}{4}$	81.1
6"	$10\frac{5}{32}$	14	$9\frac{1}{2}$	11	1	$8x\frac{7}{8}$	150.4
8"	$12\frac{9}{32}$	$19\frac{1}{2}$	$11\frac{3}{4}$	$13\frac{1}{2}$	$1\frac{1}{8}$	$8x\frac{7}{8}$	253.6
10"	$13\frac{27}{32}$	$24\frac{1}{2}$	$14\frac{1}{4}$	16	$1\frac{3}{16}$	12x1	443
12"	$15\frac{5}{16}$	$27\frac{1}{2}$	17	19	$1\frac{1}{4}$	12x1	639.5

■ Note:Design and materials are subject to change without notice.

Flanged End Ductile Iron Body Check Valve

- Ductile Iron Body with EPDM Seat.Bronze plate.
- 250 Lb.Dual plate. UL Listed .FM Approved.

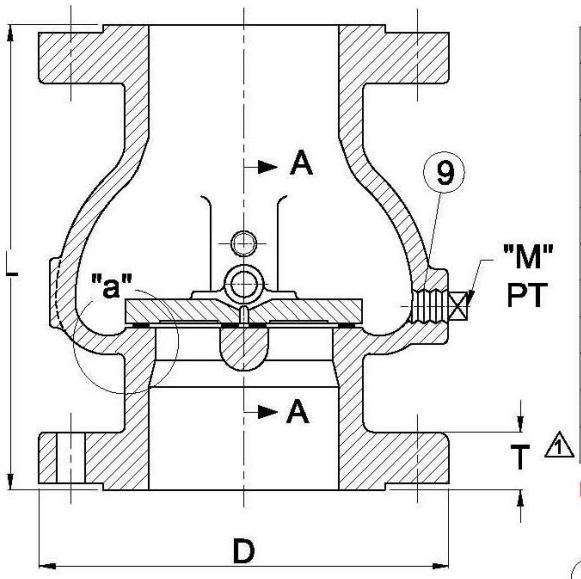

Fig:453UF

MATERIAL LIST

No.	Part	Material	ASTM SPEC.
1	Body	Ductile Iron	A536
2	Body Seal	EPDM	
3	Plate	Stainless Steel	ASTM A351.CF8
4	Spring	Stainless Steel	AISI 316
5	Hinge Pin	Stainless Steel	AISI 316
6	Washer	Teflon	
7	Thrust Washer	Teflon	
8	Plug	Mild Steel	A105-80
9	Square Plug	steel	A105-80
10	Packing	Buna"N"	
11	Eyebolt	steel	A 307-B

■ Note:Design and materials are subject to change without notice.

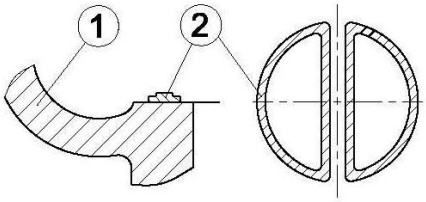

"a"Detail

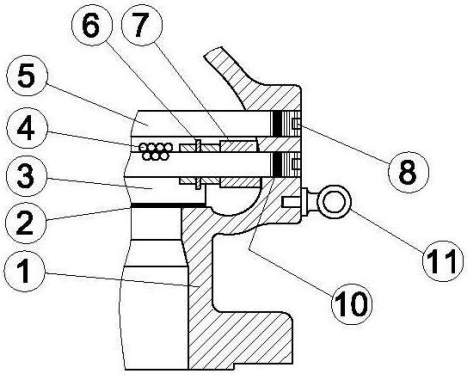

SECTION A-A

DIMENSIONS

Nominal Size	Dimensions L	D	T	"M"PT	Net.Wt. Lbs.
3"	6 5/8	7 1/2	3/4	1/2	22.7
4"	7 1/2	9	15/16	1/2	36.7
6"	9	11	1	3/4	62.9
8"	10 1/2	13 1/2	1 1/8	3/4	101.6

NOTE:Available to ANSI or ISO
Flange dimensions see OD-001

Grooved End Ductile Iron Body Check Valve

- Ductile Iron Body with EPDM Seat.SUS304 plate.
- 200 Lb.Dual plate. UL Listed .FM Approved.

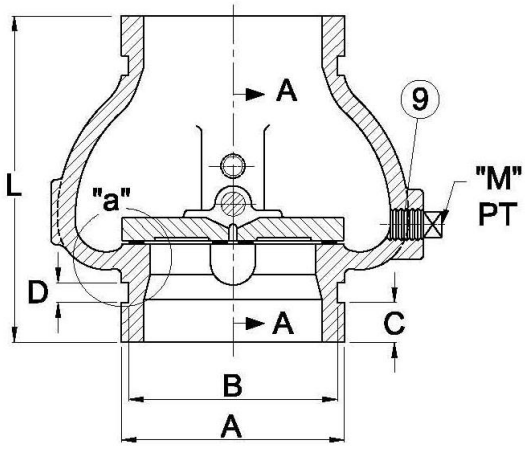

Fig:453UG

MATERIAL LIST

No.	Part	Material	ASTM SPEC.
1	Body	Ductile Iron	A536
2	Body Seal	EPDM	
3	Plate	Stainless Steel	ASTM A351.CF8
4	Spring	Stainless Steel	AISI 316
5	Hinge Pin	Stainless Steel	AISI 316
6	Washer	Teflon	
7	Thrust Washer	Teflon	
8	Plug	Mild Steel	A105-80
9	Square Plug	Mild Steel	A105-80
10	Packing	Buna"N"	

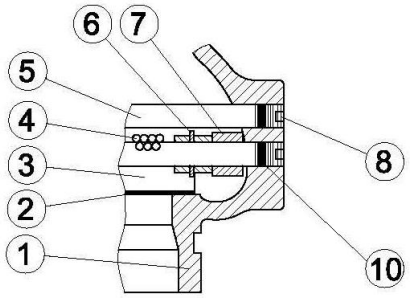

SECTION A-A

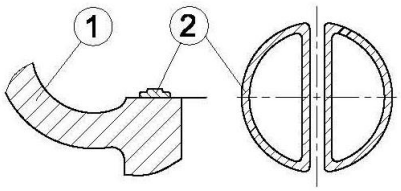

"a"Detail

DIMENSIONS unit:inch

Nominal Size	Dimensions						Net.Wt. Lbs.
	L	A	B	C	D	"M"PT	
3"	$5\frac{1}{8}$	$3\frac{1}{2}$	$3\frac{11}{32}$	$\frac{5}{8}$	$\frac{5}{16}$	$\frac{1}{2}$	8.8
4"	$5\frac{5}{8}$	$4\frac{1}{2}$	$4\frac{21}{64}$	$\frac{5}{8}$	$\frac{3}{16}$	$\frac{1}{2}$	12.3
6"	7	$6\frac{5}{8}$	$6\frac{29}{64}$	$\frac{5}{8}$	$\frac{3}{16}$	$\frac{3}{4}$	27.7
8"	$8\frac{1}{4}$	$8\frac{5}{8}$	$8\frac{7}{16}$	$\frac{3}{4}$	$\frac{7}{16}$	$\frac{3}{4}$	48.4

■ Note:Design and materials are subject to change without notice.

Note : Valve groove dimensions per AWWA C-606 for steel pipe of I.P.S.dimensions.Optional grooved end configurations for ductile cast iron pipe per AWWA C-606 available upon request.

175 WP Iron Gate Valves

- Fire Protection Valve .UL Listed .FM Approved. Outside Screw and Yoke Rising Stem.
- Iron Body.Bronze Mounted.Bolted Bonnet.Solid Wedge.
- Flanged ends to ANSI B16.1 Class 125.
- Working pressure: 175psi
  Test Pressure: 350psi

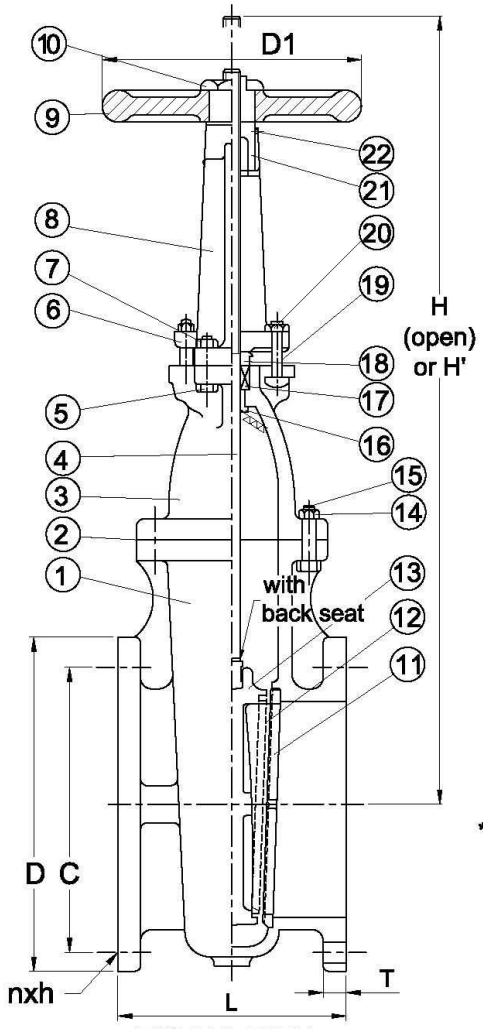

FIG NO:762U

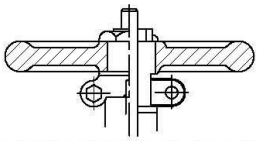

YOKE CONSTRUCTION
SIZE 8"-12"

MATERIAL LIST

NO.	PART NO.	PART	MATERIAL	ASTM SPEC.
1	01	BODY	CAST IRON	A126-B
2	14	GASKET	NON-ASBESTOS	
3	02	BONNET	CAST IRON	A126-B
4	12	STEM	Stainless Steel	AISI 420
5	28H	YOKE BOLT	STEEL	A307-A
6	06	GLAND FLANGE	DUCTILE IRON	A536
7	27	NUT	STEEL	A307-A
8	04	YOKE	CAST IRON	A126-B
9	05	HAND WHEEL	CAST IRON	A126-B
10	18	WHEEL NUT	DUCTILE IRON	A536
11	08B	BODY SEAT RING	CAST BRONZE	B62
12	08D	DISC SEAT RING	CAST BRONZE	B62
13	03	DISC	CAST IRON	A126-B
14	27	NUT	STEEL	A307-A
15	28H	BONNET BODY BOLT	STEEL	A307-A
16	09B	BONNET BUSH	CAST BRONZE	B62
17	15	PACKING	NON-ASBESTOS	
18	07	GLAND	CAST BRONZE	B62
19	28S	GLAND BOLT	STEEL	A307-A
20	27	NUT	BRASS	B16
21	09	YOKE SLEEVE	CAST BRONZE	B62
22	11C	SLEEVE NUT	CAST IRON	A126-B

* Stem Also Available in Brass or Stainless Steel(304)

Dimensions unit:inch

Nominal Size	Dimensions								Net.Wt. Lbs.
	H	H'	L	C	D	D1	T	nxh	
2"	14 3/4	15 1/2	7	4 3/4	6	7	5/8	4x3/4	36
2 1/2"	16 5/8	17 7/8	7 1/2	5 1/2	7	7	11/16	4x3/4	48
3"	18 7/8	20 1/4	8	6	7 1/2	8	3/4	4x3/4	60
4"	23 3/8	25 3/8	9	7 1/2	9	10	15/16	8x3/4	103
6"	32 1/4	33 7/8	10 1/2	9 1/2	11	12	1	8x7/8	186
8"	39 1/2	43 3/8	11 1/2	11 3/4	13 1/2	14	1 1/8	8x7/8	298
10"	48 1/8	52 1/8	13	14 1/4	16	16	1 3/16	12x1	441
12"	56	60	14	17	19	18	1 1/4	12x1	628

■ Note:Design and materials are subject to change without notice.

IRON BODY GATE VALVE

- Fire Protection Valve .UL Listed .FM Approved.
- Iron Body.Bronze Mounted.Non-Rising Stem.
- End flanges conform to ANSI B16.1 Class 125.
- Working pressure: 175 psi non-shock cold water.

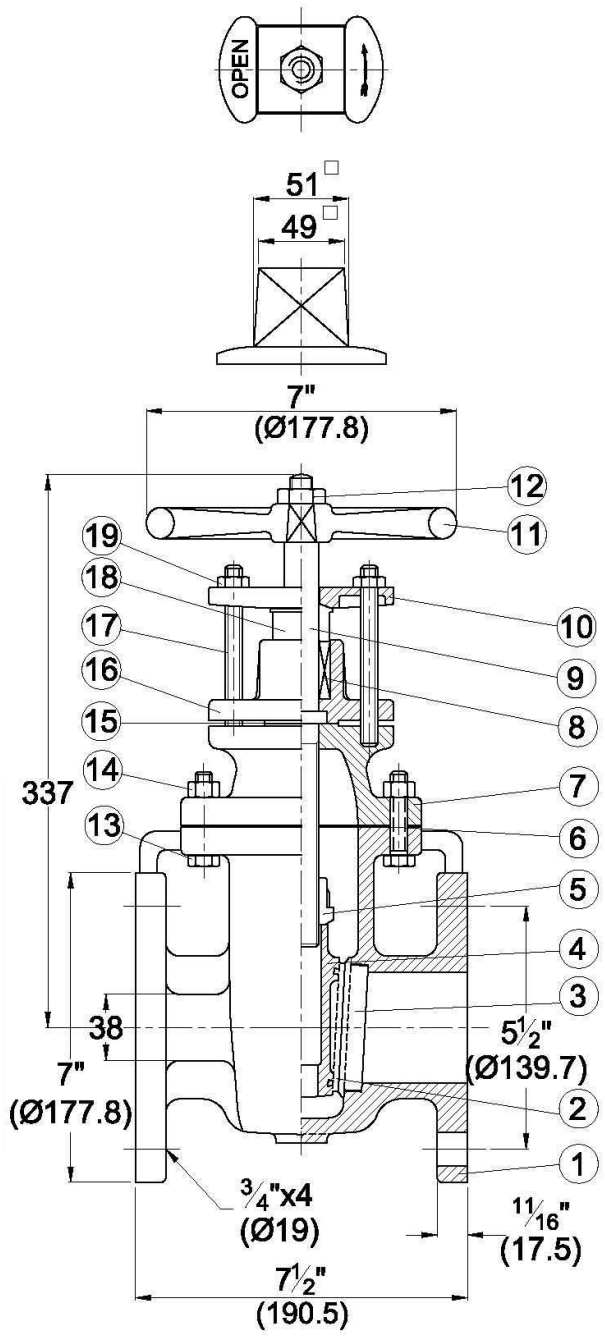

FIG NO:710U 2½"

MATERIAL LIST

NO.	PART NO.	PART	MATERIAL	ASTM SPEC.
1	01	Body	Cast Iron	A126-B
2	08D	Disc Seat Ring	Cast Bronze	B62
3	08B	Body Seat Ring	Cast Bronze	B62
4	03	Disc	Cast Iron	A126-B
5	13	Disc Nut	Cast Bronze	B62
6	14	Gasket	Non-Asbestos	
7	02	Bonnet	Cast Iron	A126-B
8	15	Packing	Non-Asbestos	
9	12	Stem	Brass	B16
10	06	Gland Flange	Ductile Iron	A536
11	05	Hand Wheel	Cast Iron	A126-B
12	27	Nut	Steel	A307-A
13	28H	Hex.Head Bolt	Steel	A307-A
14	27	Nut	Steel	A307-A
15	14S	Gasket	Non-Asbestos	
16	04	Stuffing Box	Cast Iron	A126-B
17	28S	Stud Bolt	Steel	A307-A
18	07	Gland	Cast Bronze	B62
19	27	Nut	Steel	A307-A

* Stem Also Available in Bronze(B62)or Stainless Steel(304/420).

- Design and materials are subject to change without notice.

IRON BODY GATE VALVE

- Fire Protection Valve .UL Listed .FM Approved.
- Iron Body.Bronze Mounted. Non-Rising Stem.Parallel Seats.Double Disc.
- Mechanical joint ends conform to AWWA C111 and ANSI A21.11.
- End flanges conform to ANSI B16.1 Class 125.
- Working pressure: 175 psi non-shock cold water.

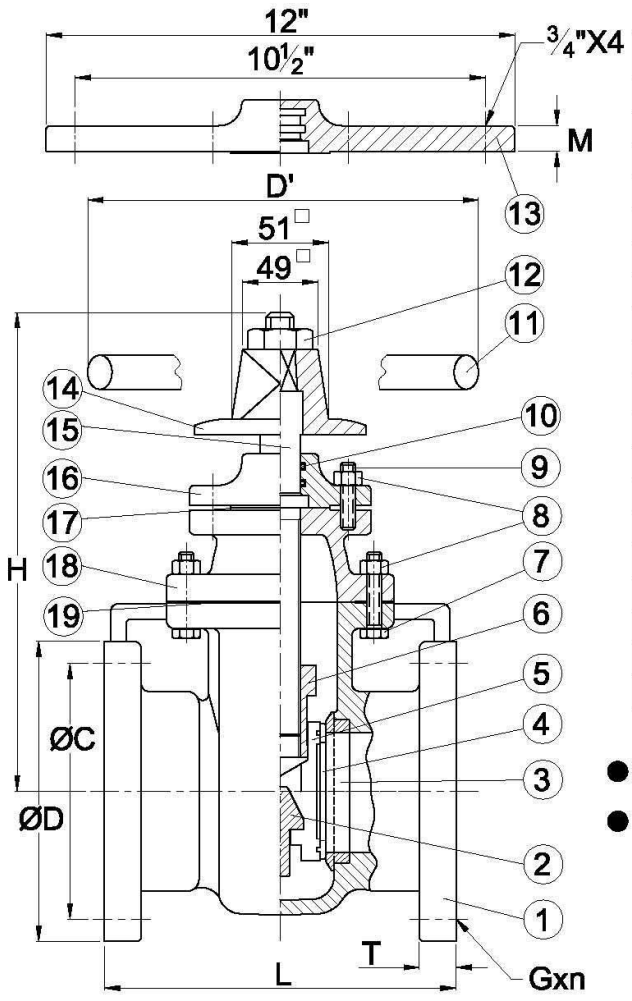

FIG NO:710U

MATERIAL LIST

NO.	PART NO.	PART	MATERIAL	ASTM SPEC.
1	01	Body	Cast Iron	A126-B
2	13C	Wedge Pin	Cast Bronze	B62
3	08B	Body Seat Ring	Cast Bronze	B62
4	08D	Disc Seat Ring	Cast Bronze	B62
5	03	Disc	Cast Iron	A126-B
6	13	Stem Nut	Cast Bronze	B62
7	28H	Hex.Head Bolt	Steel	A307-A
8	27	Nut	Steel	A307-A
9	28D	Stud Bolt	Steel	A307-A
10	10	O Ring	EPDM	
11	05	Hand Wheel	Cast Iron	A126-B
12	27	Nut	Steel	A307-A
13	04A	Base Plate	Cast Iron	A126-B
14	05N	Operation Nut	Steel	A126-B
15	12	Stem	Brass	B16
16	04	Box	Cast Iron	A126-B
17	14S	Gasket	Non-Asbestos	
18	02	Bonnet	Cast Iron	A126-B
19	14	Gasket	Non-Asbestos	

- Stem Also Available in Bronze(B62)or Stainless Steel(304/420).
- Design and materials are subject to change without notice.

Nominal Size	Dimensions in Inches							
	H	L	C	D	D'	T1	M	Gxn
3"	12 1/16	8	6	7 1/2	10	3/4	21/32	3/4x4
4"	13 21/32	9	7 1/2	9	10	15/16	21/32	3/4x8
6"	18 1/16	10 1/2	9 1/2	11	14	1	3/4	7/8x8
8"	20 31/32	11 1/2	11 3/4	13 1/2	14	1 1/8	3/4	7/8x8
10"	24 19/32	13	14 1/4	16	16	1 3/16	13/16	1x12
12"	28 15/64	14	17	19	18	1 1/4	7/8	1x12

IRON BODY GATE VALVE

- Fire Protection Valve .UL Listed .FM Approved.
- Iron Body.Bronze Mounted. Non-Rising Stem.Parallel Seats.Double Disc.
- Mechanical joint ends conform to AWWA C111 and ANSI A21.11.
- End flanges conform to ANSI B16.1 Class 125.
- Working pressure: 175 psi non-shock cold water.

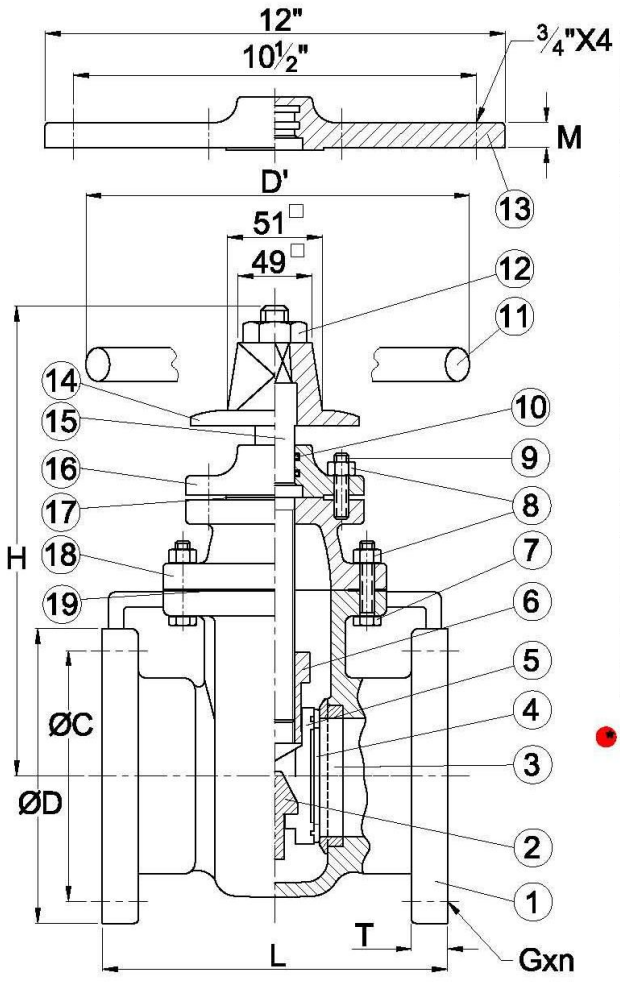

FIG NO:710UF

MATERIAL LIST

NO.	PART NO.	PART	MATERIAL	ASTM SPEC.
1	01	Body	Cast Iron	A126-B
2	13C	Wedge Pin	Cast Bronze	B62
3	08B	Body Seat Ring	Cast Bronze	B62
4	08D	Disc Seat Ring	Cast Bronze	B62
5	03	Disc	Cast Iron	A126-B
6	13	Stem Nut	Cast Bronze	B62
7	28H	Hex.Head Bolt	Steel	A307-A
8	27	Nut	Steel	A307-A
9	28D	Stud Bolt	Steel	A307-A
10	10	O Ring	EPDM	
11	05	Hand Wheel	Cast Iron	A126-B
12	27	Nut	Steel	A307-A
13	04A	Base Plate	Cast Iron	A126-B
14	05N	Operation Nut	Steel	A126-B
15	12	Stem	Stainless Steel	AISI 420
16	04	Box	Cast Iron	A126-B
17	14S	Gasket	Non-Asbestos	
18	02	Bonnet	Cast Iron	A126-B
19	14	Gasket	Non-Asbestos	

- Stem Also Available in Brass or Stainless Steel(304)

Nominal Size	Dimensions in Inches							
	H	L	C	D	D'	T1	M	Gxn
3"	12 1/16	8	6	7 1/2	10	3/4	21/32	3/4x4
4"	13 21/32	9	7 1/2	9	10	15/16	21/32	3/4x8
6"	18 1/16	10 1/2	9 1/2	11	14	1	3/4	7/8x8
8"	20 31/32	11 1/2	11 3/4	13 1/2	14	1 1/8	3/4	7/8x8
10"	24 19/32	13	14 1/4	16	16	1 3/16	13/16	1x12
12"	28 15/64	14	17	19	18	1 1/4	7/8	1x12

- Note:Design and materials are subject to change without notice.

250 PSI, Resilient Wedge Gate Valve

- Fire Protection Valve.
- Non-Rising Stem Indicator Post Pattern.
- Epoxy Coated Interior/Exterior.
- Basic Valve Meets or Exceeds AWWA C-509.

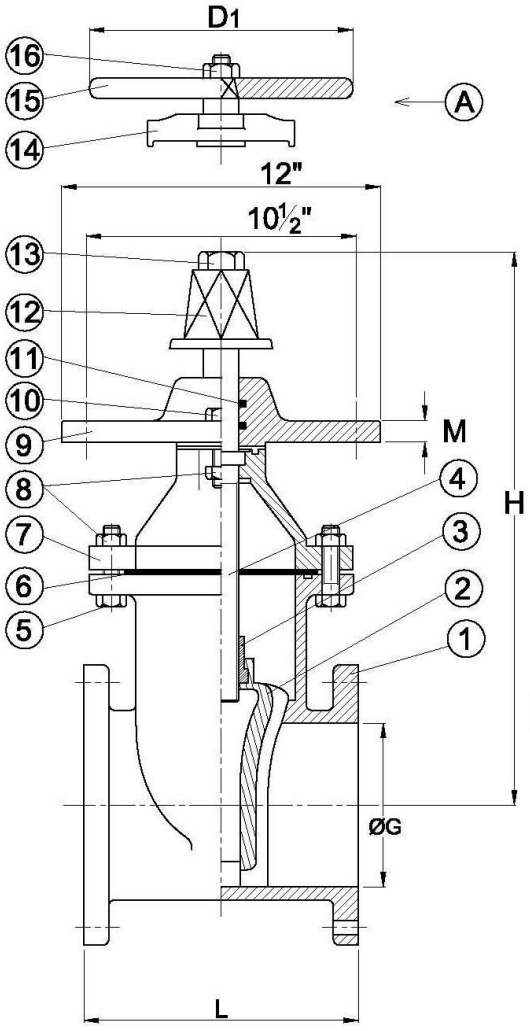

Fig. 721F

MATERIAL LIST

Item	No.	Part	Material	ASTM SPEC.
1	01	Body	Ductile Iron	A536 Grade 65-45-12
2	03	Disc Rubber	Cast Iron Coated with EPDM	
3	13	Disc Nut	Cast Bronze	B62
4	12	Stem	Stainless Steel	AISI 420
5	28H	Hex. Head Bolt	Steel	A307-A
6	14	Rubber Gasket	EPDM	
7	02	Bonnet	Cast Iron	A126-B
8	27	Hexagon Nut	Steel	A307-A
9	04A	Base Plate	Cast Iron	A126-B
10	28H	Hex. Head Bolt	Steel	A307-A
11	10	O Ring	EPDM	
12	05N	Operation Nut	Cast Iron	A126-B
13	27	Hexagon Nut	Steel	A307-A
14	04	Box	Cast Iron	A126-B
15	05	Hand Wheel	Cast Iron	A126-B
16	27	Hexagon Nut	Steel	A307-A

- Flange designed to EN 1092-2 PN10/PN16,ANSI B16.1 Class125 or other types.

Ⓐ : Valve with handwheel is also available.

Nominal Size	Dimensions unit:mm				Net.Wt Lbs.
	H	L	ØD1	ØG	
2½"	254	191	178	63	
3"	352	203.2	254	76.2	
4"	364	228.6	254	101.6	
6"	464	266.7	305	152.4	
8"	551	292.1	356	203.2	
10"	651	330	406	254	
12"	740	356	457	304.8	

■ Design and materials are subject to change without notice.

250 Lb.WWP Grooved Ductile Iron Body Resilient Wedge Gate Valves

- Fire Protection Valve. UL Listed .FM Approved.
- Non-Rising Stem Indicator Post Pattern.
- Epoxy Coated Interior/Exterior.
- Basic Valve Meets or Exceeds AWWA C-509 Standard.

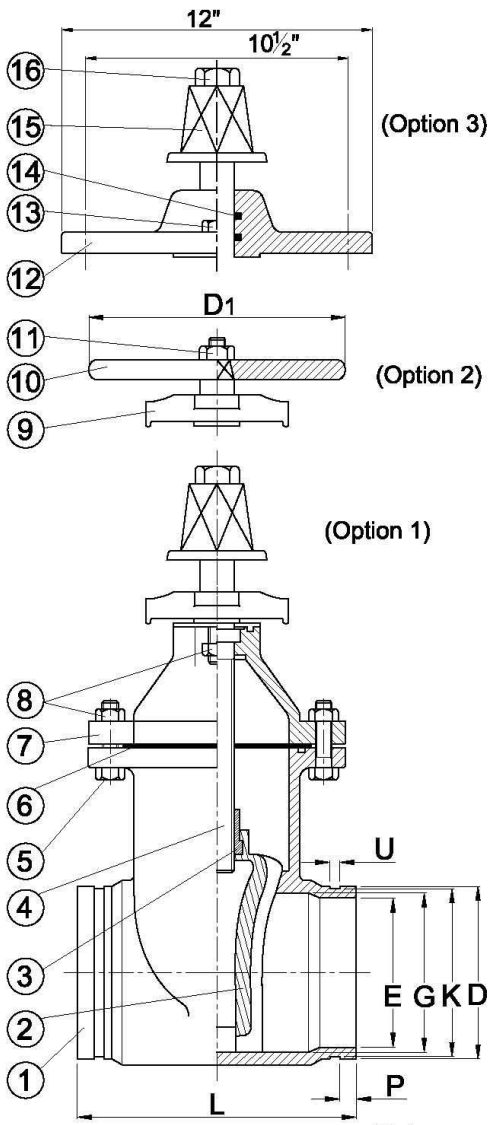

Fig: 721G

MATERIAL LIST

Item	No.	Part	Material	ASTM SPEC.
1	01	Body	Ductile Iron	A536 Grade 65-45-12
2	03	Disc Rubber	Cast Iron Coated with EPDM	
3	13	Disc Nut	Cast Bronze	B62
4	12	Stem	Stainless Steel	AISI 420
5	28H	Hex. Head Bolt	Steel	A307-A
6	14	Rubber Gasket	EPDM	
7	02	Bonnet	Cast Iron	A126-B
8	27	Hexagon Nut	Steel	A307-A
9	04	Box	Cast Iron	A126-B
10	05	Handwheel	Cast Iron	A126-B
11	27	Hexagon Nut	Steel	A307-A
12	04A	Base Plate	Cast Iron	A126-B
13	28H	Hex. Head Bolt	Steel	A307-A
14	10	O Ring	EPDM	
15	05N	Operation Nut	Cast Iron	A126-B
16	27	Hexagon Nut	Steel	A307-A

Stem Also Available in Brass or Stainless Steel(304).

■ Note:Design and materials are subject to change without notice.

Dimensions

unit:inch

Nominal Size	Dimensions								Net.Wt. Lbs.
	L	D	D1	G	E	K	P	U	
2½"	191	73	178	52	57	68.8	15.9	8	
3"	203.2	88.9	254	76.2	73.5	84.7	15.9	8	
4"	228.6	114.3	254	101.6	97	109.8	15.9	9.5	
6"(165.1)	266.7	165.1	305	152.4	147	160.5	15.9	9.5	
6"(168.3)	266.7	168.3	305	152.4	147	163.7	15.9	9.5	
8"	292.1	219.1	356	203.2	198	214.1	19.1	11.1	
10"	330	273	406	254	249	267.9	19.1	12.7	
12"	356	323.9	457	304.8	295	317.9	19.1	12.7	

Note: 1. Gate valve groove dimensions per AWWA C-606 for steel pipe of I.P.S.dimensions.Optional grooved end configurations for ductile cast iron pipe per AWWA C-606 available upon request.

2. Valve configured with Operating Nut (Option 1), Handwheel (Option 2) and Base Plate for Indicator Post (Option 3) available upon request.

250 PSI Resilient Wedge Gate Valve

- Fire Protection Valve.
- Outside Screw and Yoke Rising Stem.
- Epoxy Coated Interior/Exterior.
- Basic Valve Meets or Exceeds AWWA C-509.

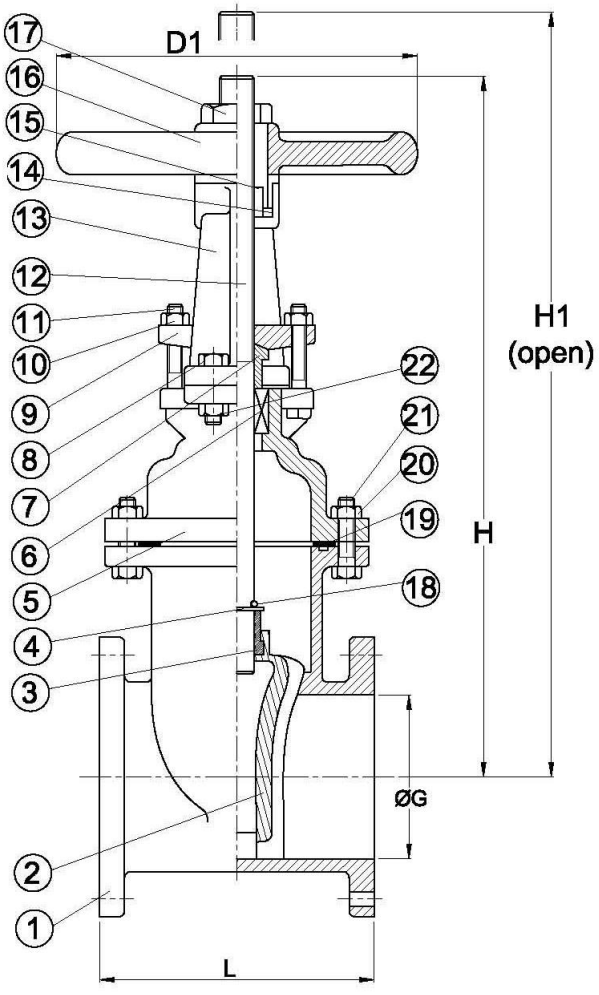

Fig: 722F

MATERIAL LIST

Item	No.	Part	Material	ASTM SPEC.
1	01	Body	Ductile Iron	A536 65-45-12
2	03	Disc Rubber	Cast Iron Coated with EPDM	
3	13	Disc Nut	Cast Bronze	B62
4	22T	Taper Pin	Stainless Steel	AISI 420
5	02	Bonnet	Cast Iron	A126-B
6	15	Packing	Non-Asbestos Packing	
7	07	Gland	Cast Bronze	B62
8	28H	Hex. Head Bolt	Steel	A307-A
9	06	Gland Flange	Ductile Iron	A536 65-45-12
10	27	Hexagon Nut	Brass	B16
11	28S	Square Head Bolt	Steel	A307-A
12	12	Stem	Stainless Steel	AISI 420
13	04	Yoke	Cast Iron	A126-B
14	11C	Sleeve Nut	Ductile Iron	A536 65-45-12
15	09	Yoke Sleeve	Cast Bronze	B62
16	05	Hand Wheel	Cast Iron	A126-B
17	18	Wheel Nut	Ductile Iron	A536 65-45-12
18	10	O Ring	EPDM	
19	14	Rubber Gasket	EPDM	
20	27	Hexagon Nut	Steel	A307-A
21	28H	Hex. Head Bolt	Steel	A307-A
22	27	Hexagon Nut	Steel	A307-A

- Flange designed to EN 1092-2 PN10/PN16,ANSI B16.1 Class125 or other types.
- Size 2-1/2"~4" has one piece Yoke / bonnet Construction. Size 6"~12" has separate Yoke bolted to bonnet.
- Design and materials are subject to change without notice.

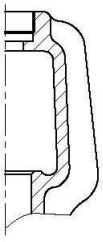

Size 2-1/2" to 4"
One piece Yoke/bonnet Construction

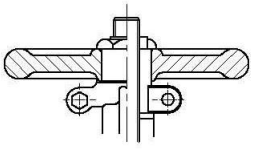

Size 6" to 12"
Yoke Construction

Nominal Size	Dimensions unit:mm					Net.Wt Lbs.
	L	ØD1	ØG	H	H1	
2½"	191	178	63	324	378	
3"	203.2	254	76.2	483	559	
4"	228.6	254	101.6	495	597	
6"	266.7	305	152.4	664	816	
8"	292.1	356	203.2	816	1019	
10"	330	406	254	1019	1273	
12"	356	457	304.8	1191	1505	

250 Lb.WWP Grooved Ductile Iron Body Resilient Wedge Gate Valves

- Fire Protection Valve.
- Outside Screw and Yoke Rising Stem.
- Epoxy Coated Interior Exterior.
- Basic Valve Meets or Exceeds AWWA C-509 Standard.

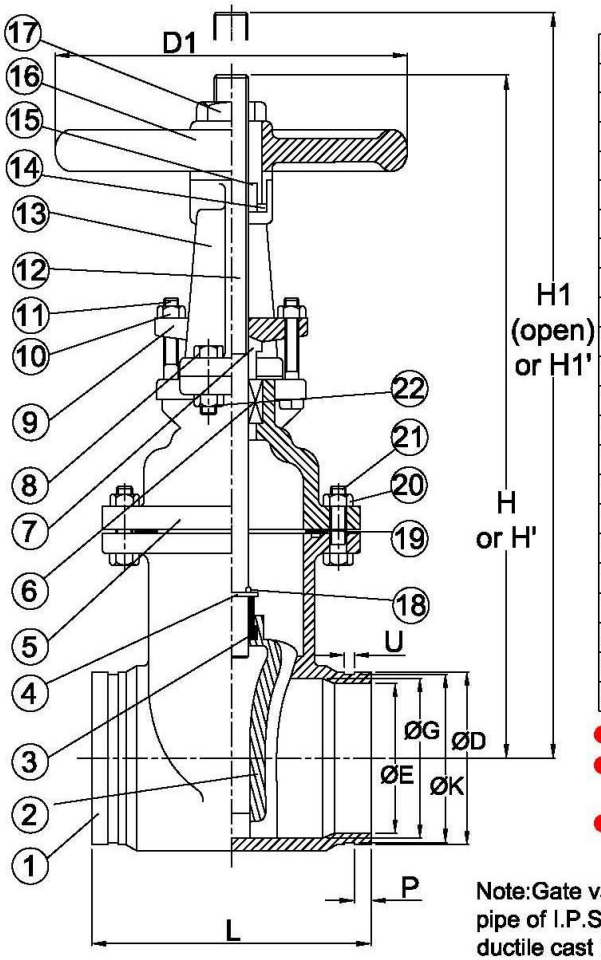

Fig. 722G

MATERIAL LIST

Item	No.	Part	Material	ASTM SPEC.
1	01	Body	Ductile Iron	A536 Grade 65-45-12
2	03	Disc Rubber	Cast Iron Coated with EPDM	
3	13	Disc Nut	Cast Bronze	B62
4	22T	Taper Pin	Stainless Steel	AISI 304
5	02	Bonnet	Cast Iron	A126-B
6	15	Packing	Non-Asbestos Packing	
7	07	Gland	Cast Bronze	B62
8	28H	Hex. Head Bolt	Steel	A307-A
9	06	Gland Flange	Ductile Iron	A536 Grade 65-45-12
10	27	Hexagon Nut	Brass	B16
11	28S	Square Head Bolt	Steel	A307-A
12	12	Stem	Stainless Steel	AISI 420
13	04	Yoke	Cast Iron	A126-B
14	11C	Sleeve Nut	Ductile Iron	A536 Grade 65-45-12
15	09	Yoke Sleeve	Cast Bronze	B62
16	05	Hand Wheel	Cast Iron	A126-B
17	18	Wheel Nut	Ductile Iron	A536 Grade 65-45-12
18	10	O Ring	EPDM	
19	14	Rubber Gasket	EPDM	
20	27	Hexagon Nut	Steel	A307-A
21	28H	Hex. Head Bolt	Steel	A307-A
22	27	Hexagon Nut	Steel	A307-A

- Stem Also Available in Brass or Stainless Steel(304).
- Size 3"~4" made with bonnet,Size 6"~made with separate yoke bolted to bonnet.
- H' and H1' denote longer stem to allow for tamper switch notch.

Note:Gate valve groove dimensions per AWWA C-606 for steel pipe of I.P.S.dimensions. Optional grooved end configurations for ductile cast iron pipe per AWWA C-606 available upon request.

Nominal Size	Dimensions unit:mm											
	H	H1	L	ØD	ØD1	ØG	ØE	ØK	P	U	H'	H1'
2½"	305	359	191	73	178	52	57	68.8	15.9	8	324	378
3"	451	530	203.2	88.9	254	76.2	73.5	84.7	15.9	8	483	559
4"	464	565	228.6	114.3	254	101.6	97	109.8	15.9	9.5	495	597
6" (165.1)	616	775	266.7	165.1	305	152.4	147	160.5	15.9	9.5	664	816
6" (168.3)	616	775	266.7	168.3	305	152.4	147	163.7	15.9	9.5	664	816
8"	765	972	292.1	219.1	356	203.2	198	214.1	19.1	11.1	816	1019
10"	918	1175	330	273	406	254	249	267.9	19.1	12.7	1019	1273
12"	1080	1394	356	323.9	457	304.8	295	317.9	19.1	12.7	1191	1505

■ Note:Design and materials are subject to change without notice.

ADJUSTABLE TYPE INDICATOR POST

- Fire Protection Products.UL Listed.FM Approved.
- Vertical type enables undergound fire line valve to be operated at ground level with operating wrench.

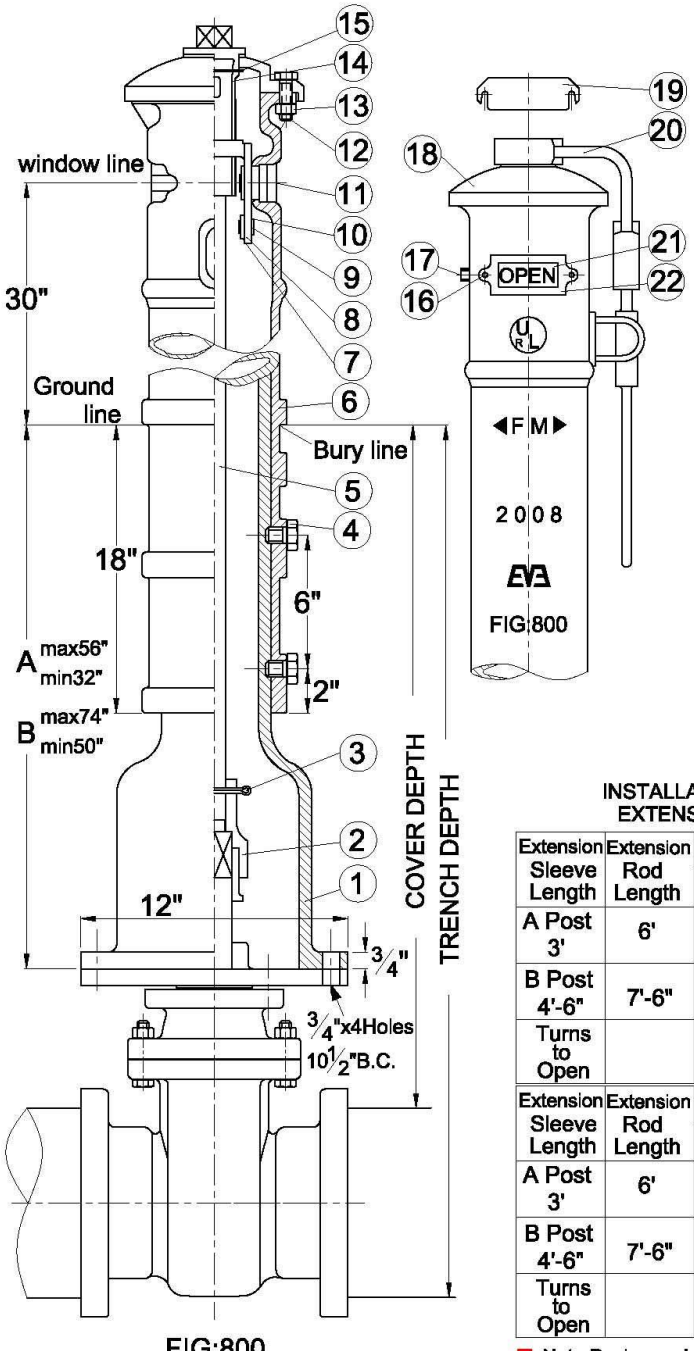

FIG:800

MATERIAL LIST

Item	No.	Part	Material	ASTM SPEC.
1	02	Extension Sleeve	Cast Iron	A126-B
2	13	Socket	Cast Iron	A126-B
3	22S	Cotter Pin	Brass	B16
4	28H	Hex.Head Bolt	Steel	A307-A
5	12	Extension Rod	Mild Steel	A105-80
6	01	Body	Cast Iron	A126-B
7	27S	Square Head Nut	Steel	A307-A
8	09B	Target Frame	Cast Bronze	B62
9	38	Fixed Plate	Steel	Commercial
10	28R	Round Head Bolt	Steel	A307-A
11	36	Window Glass	Plexiglass	
12	28H	Hex.Head Bolt	Steel	A307-A
13	27	Hexagon Nut	Steel	A307-A
14	09	Operating Stem	Cast Bronze	B62
15	10C	Retaining Ring	Steel	SAE 1065-1090
16	28R	Round Head Bolt	Steel	A307-A
17	28P	Plug	Steel	A307-A
18	35	Cap	Cast Iron	A126-B
19	39	Sign Shield	SPC	
20	05L	Operating-Wrench	Ductile Iron	A536
21	32	Sign Plate "OPEN SHUT"	Aluminmu	
22	37	Window Frame	Steel	Commercial

INSTALLATION DIMENSIONS FOR INDICATOR POST
EXTENSION SLEEVE AND EXTENSION ROD

Extension Sleeve Length	Extension Rod Length	TRENCH DEPTH				WGT.
		2½"valve	3"valve	4"valve	6"valve	Lbs.
A Post 3'	6'	3'-4" to 5'-4"	3'-8" to 5'-8"	3'-8" to 5'-8"	4'-1" to 6'-1"	252
B Post 4'-6"	7'-6"	4'-10" to 6'-10"	5'-2" to 7'-2"	5'-2" to 7'-2"	5'-7" to 7'-7"	282
Turns to Open		8	8	10½	12½	

Extension Sleeve Length	Extension Rod Length	TRENCH DEPTH				WGT.
		8"valve	10"valve	12"valve		Lbs.
A Post 3'	6'	4'-5" to 6'-5"	4'-9.5" to 6'-9.5"	5'-2" to 7'-2"		252
B Post 4'-6"	7'-6"	5'-11" to 7'-11"	6'-3.5" to 8'-3.5"	6'-8" to 8'-8"		282
Turns to Open		16½	20½	24½		

■ Note:Design and materials are subject to change without notice.

WALL TYPE INDICATOR POST

● Fire Protection Products.UL Listed.FM Approved.

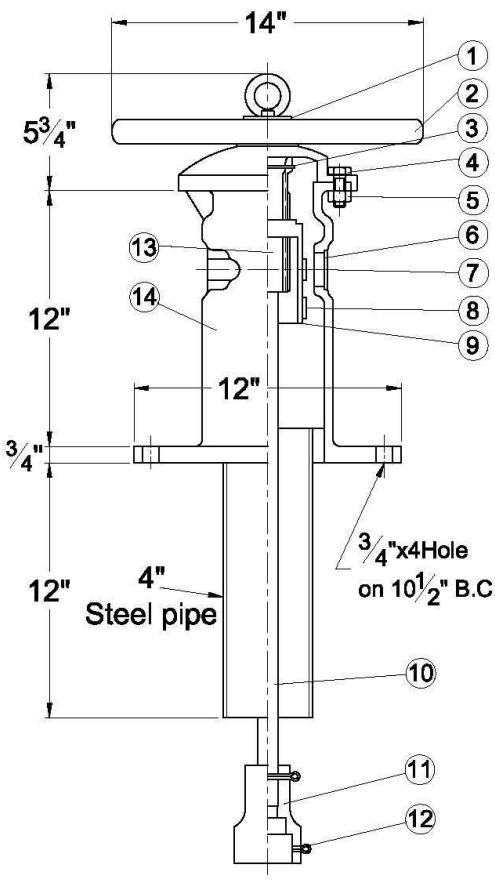

MATERIAL LIST

Item	No.	Part	Material	ASTM SPEC.
1	21	Washer	Steel	Commercial
2	05	Hand Wheel	Cast Iron	A126-B
3	10C	Retaining Ring	Steel	SAE1065-1090
4	28H	Hex.Head Bolt	Steel	A307-A
5	27	Hexagon Nut	Steel	A307-A
6	14	Gasket	Rubber	Commercial
7	36	Window Glass	Plexiglass	Commercial
8	38	Fixed Plate	Steel	Commercial
9	09B	Target Frame	Cast Bronze	B-62
10	12	Extension Rod	Mild Steel	A105-80
11	13	Socket	Cast Iron	A126-B
12	22S	Cotter Pin	Brass	B-16
13	09	Operating Stem	Cast Bronze	B-62
14	01	Body	Cast Iron	A126-B
15	35	Cap	Cast Iron	A126-B
16	32	Sign Plate	Aluminum	Commercial
17	37	Window Frame	Steel	Commercial

DIMENSION-WEIGHTS

Nominal Size	Dimensions in Inches		Ext. Rod Length	Approx Net.Wt. (Lbs)
	A	B		
4"	9.56	13.63	3'	90 (All Sizes)
6"	13.69	18.00	3'	
8"	16.50	21.00	3'	
10"	19.88	24.63	3'	
12"	23.50	28.25	3'	

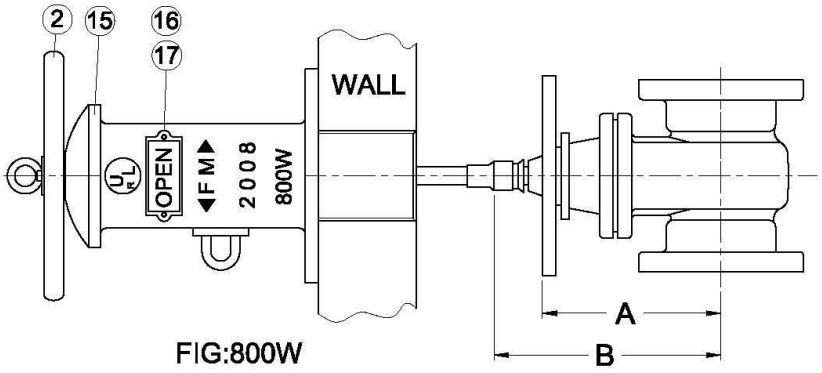

FIG:800W

NOTE:

1. Used for applications where a valve is installed behind a wall.
2. The wall flange of the wall type Indicator Post is tapped for 4" schedule 40 steel pipe (furnished by customer)which extends through the wall.
3. Handwheel operation.

■ Note:Design and materials are subject to change without notice.

WALL TYPE INDICATOR POST

● Fire Protection Products.UL Listed.FM Approved.

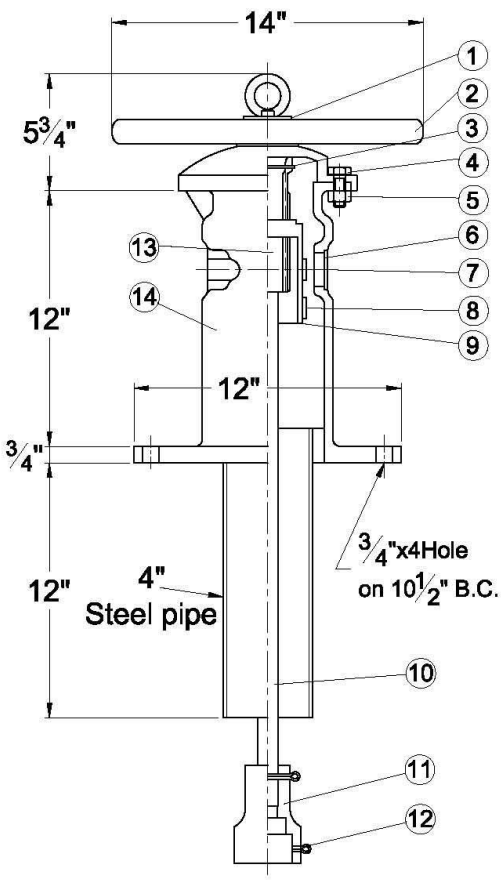

MATERIAL LIST

Item	No.	Part	Material	ASTM SPEC.
1	21	Washer	Steel	Commercial
2	05	Hand Wheel	Cast Iron	A126-B
3	10C	Retaining Ring	Steel	SAE1065-1090
4	28H	Hex.Head Bolt	Steel	A307-A
5	27	Hexagon Nut	Steel	A307-A
6	14	Gasket	Rubber	Commercial
7	36	Window Glass	Plexiglass	Commercial
8	38	Fixed Plate	Steel	Commercial
9	09B	Target Frame	Cast Bronze	B-62
10	12	Extension Rod	Mild Steel	A105-80
11	13	Socket	Cast Iron	A126-B
12	22S	Cotter Pin	Brass	B-16
13	09	Operating Stem	Cast Bronze	B-62
14	01	Body	Cast Iron	A126-B
15	35	Cap	Cast Iron	A126-B
16	32	Sign Plate	Aluminum	Commercial
17	37	Window Frame	Steel	Commercial

DIMENSION-WEIGHTS

Nominal Size	Dimensions in Inches		Ext. Rod Length	Approx Net.Wt. (Lbs)
	A	B		
4"	9.56	13.63	3'	90 (All Sizes)
6"	13.69	18.00	3'	
8"	16.50	21.00	3'	
10"	19.88	24.63	3'	
12"	23.50	28.25	3'	

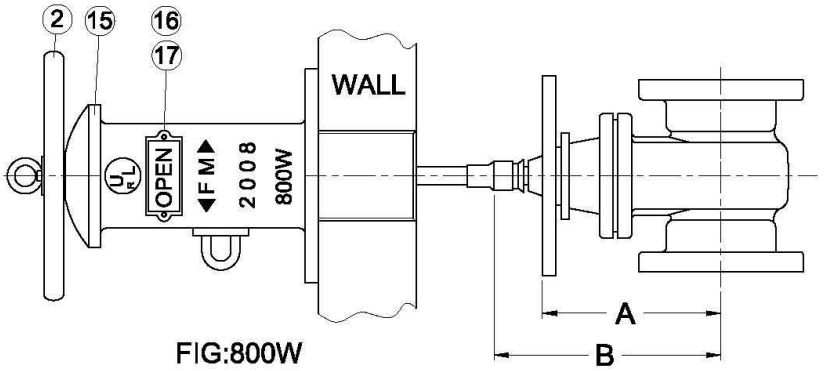

FIG:800W

NOTE:

1. Used for applications where a valve is installed behind a wall.
2. The wall flange of the wall type Indicator Post is tapped for 4" schedule 40 steel pipe (furnished by customer)which extends through the wall.
3. Handwheel operation.

■ Note:Design and materials are subject to change without notice.

TECHNOPRO

Think Safety –Think Technopro

Technopro International Fire Protection Services Inc.
Montreal QC, CANADA
+1(514) 379-3449
info@technopro-canada.com
www.technopro-canada.com